DOUBLE SIDED STEP LADDER, 3-STEP, PERFORATED - LAD-DD-18-3-P

APPROX WEIGHT: 63.90 lbs.
DOES NOT INCLUDE WEIGHT OF POWER OR PACKAGING!!!

*** ANY ADDITIONS, DELETIONS, OR OMISSIONS MUST BE CORRECTED ON THIS DRAWING AS THIS DRAWING WILL BE CONSIDERED ALL INCLUSIVE ***
ALL GRAPHICS PROVIDED ARE FOR REFERENCE ONLY. IF CERTAIN DIMENSIONS ARE CRITICAL PLEASE VERIFY THOSE DIMENSIONS WITH YOUR SALESPERSON

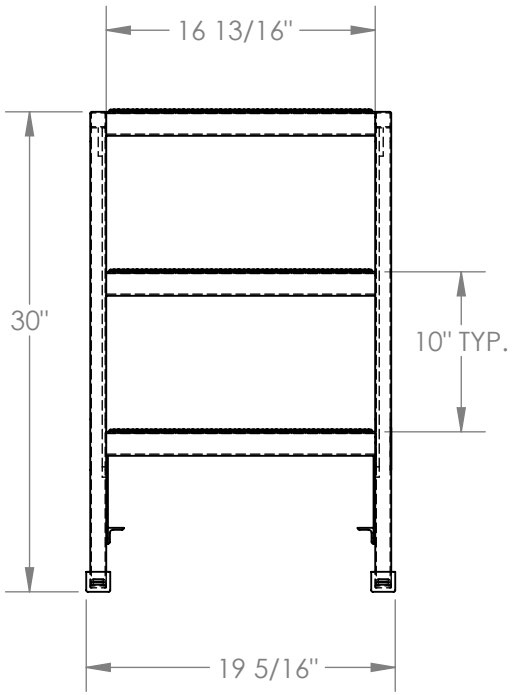

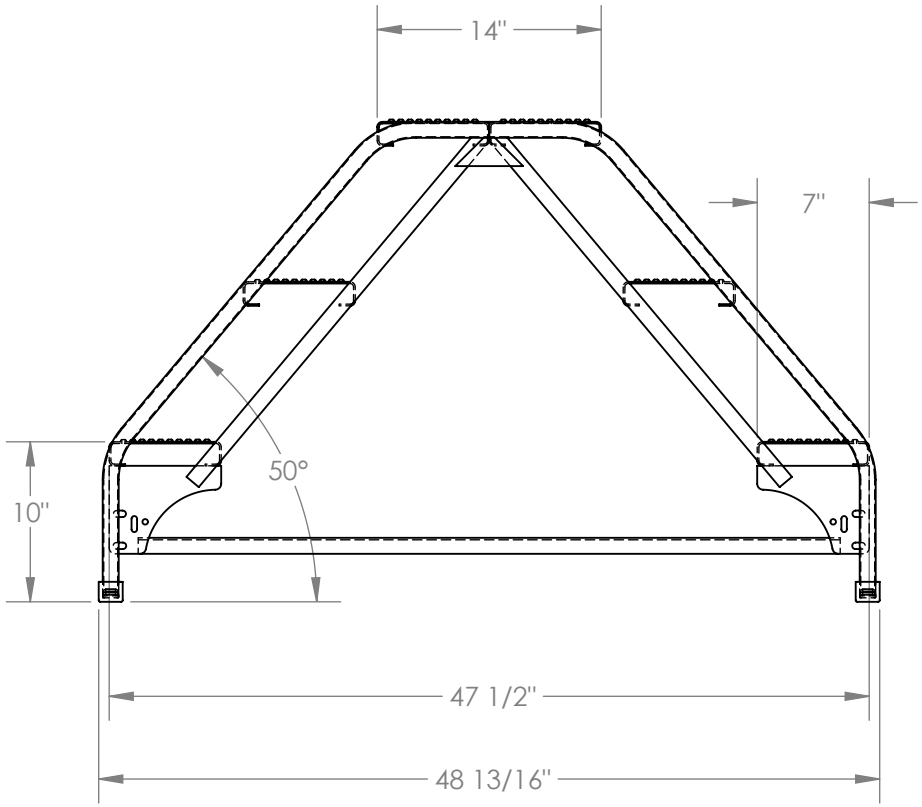

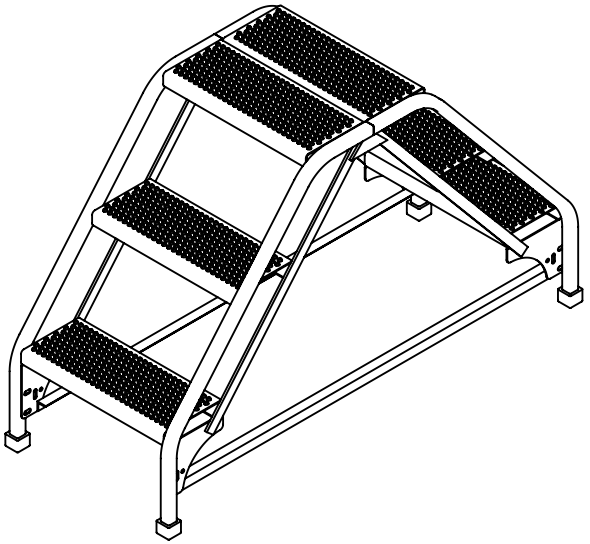

DIMENSION TOLERANCE ± 1/4"

STANDARD FEATURES

MODEL NUMBER IS LAD-DD-18-3-P
OVERALL WIDTH IS 19 5/16"
USABLE WIDTH IS 16 13/16"
OVERALL LENGTH IS 48 13/16"
USABLE LENGTH IS 47 1/2"
OVERALL HEIGHT IS 30"
STEP DEPTH IS 7"
TOP PLATFORM DEPTH IS 14"
ANGLE OF INCLINE IS 50°
STEP STYLE IS PERFORATED
COLOR IS VESTIL BLUE
MAX CAPACITY IS 350 LBS

NOTE

NONE

SPECIAL FEATURES

NONE

APPROVAL

I, THE UNDERSIGNED, AGREE THAT THE PRODUCT AS REPRESENTED SATISFIES DESIGN AND DIMENSION REQUIREMENTS. I ALSO ACKNOWLEDGE MY DUTY TO CONFIRM PRODUCT AND INSTALLATION COMPLIANCE WITH ALL APPLICABLE FEDERAL, STATE AND LOCAL REGULATIONS AND STANDARDS.

ALL SPECIAL UNITS ARE NON-RETURNABLE

[ ] As drawn [ ] As marked

Signed:_____Date:_____

LEAD TIME WILL START UPON RECEIPT OF SIGNED APPROVAL DRAWING

FOR INTERNAL USE ONLY PROJECT SIGN OFF	
SALES	
ENG.	
FAB.	
POWER	

DISTRIBUTOR'S NAME: HOF EQUIPMENT COMPANY PH: 888-990-1150			P.O.# X
			W.O.# X
DRAWN BY: B.NOTHNAGEL	DATE: 06/09/2014		SALES: X
REFERENCE: X		SCALE: 1:12	FILE NAME: 44-007-517
QUOTED LEAD TIME: X		QUOTE # X	

DOUBLE SIDED STEP LADDER, 3-STEP, GRIP STRUT - LAD-DD-18-3-G

APPROX WEIGHT: 64.93 lbs.
DOES NOT INCLUDE WEIGHT OF POWER OR PACKAGING!!!

*** ANY ADDITIONS, DELETIONS, OR OMISSIONS MUST BE CORRECTED ON THIS DRAWING AS THIS DRAWING WILL BE CONSIDERED ALL INCLUSIVE ***
ALL GRAPHICS PROVIDED ARE FOR REFERENCE ONLY. IF CERTAIN DIMENSIONS ARE CRITICAL PLEASE VERIFY THOSE DIMENSIONS WITH YOUR SALESPERSON

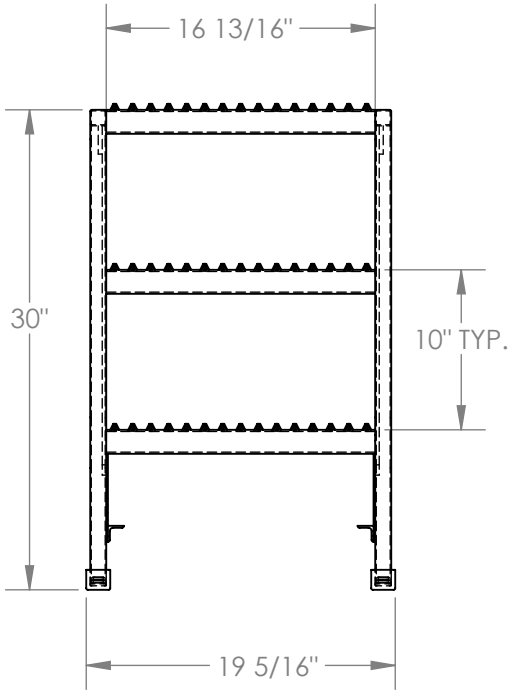

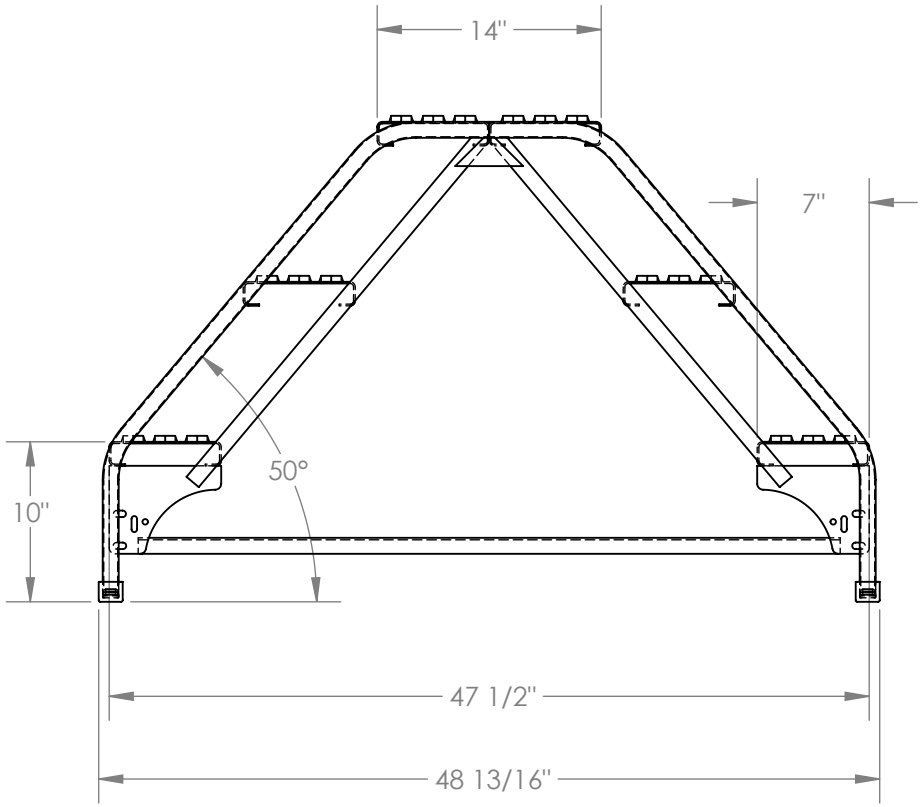

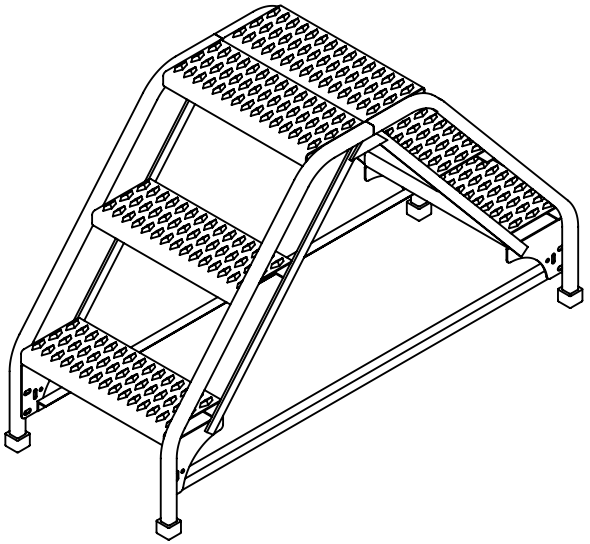

DIMENSION TOLERANCE ± 1/4"

STANDARD FEATURES

MODEL NUMBER IS LAD-DD-18-3-G
OVERALL WIDTH IS 19 5/16"
USABLE WIDTH IS 16 13/16"
OVERALL LENGTH IS 48 13/16"
USABLE LENGTH IS 47 1/2"
OVERALL HEIGHT IS 30"
STEP DEPTH IS 7"
TOP PLATFORM DEPTH IS 14"
ANGLE OF INCLINE IS 50°
STEP STYLE IS GRIP STRUT
COLOR IS VESTIL BLUE
MAX CAPACITY IS 350 LBS

NOTE

NONE

SPECIAL FEATURES

NONE

APPROVAL

I, THE UNDERSIGNED, AGREE THAT THE PRODUCT AS REPRESENTED SATISFIES DESIGN AND DIMENSION REQUIREMENTS. I ALSO ACKNOWLEDGE MY DUTY TO CONFIRM PRODUCT AND INSTALLATION COMPLIANCE WITH ALL APPLICABLE FEDERAL, STATE AND LOCAL REGULATIONS AND STANDARDS.

ALL SPECIAL UNITS ARE NON-RETURNABLE

[ ] As drawn [ ] As marked

Signed:_____Date:_____

LEAD TIME WILL START UPON RECEIPT OF SIGNED APPROVAL DRAWING

FOR INTERNAL USE ONLY PROJECT SIGN OFF	
SALES	
ENG.	
FAB.	
POWER	

DISTRIBUTOR'S NAME: HOF EQUIPMENT COMPANY PH: 888-990-1150			P.O.# X
			W.O.# X
DRAWN BY: B.NOTHNAGEL	DATE: 06/09/2014		SALES: X
REFERENCE: X		SCALE: 1:12	FILE NAME: 44-007-508
QUOTED LEAD TIME: X		QUOTE # X	

DOUBLE SIDED STEP LADDER, 3-STEP, PERFORATED - LAD-DD-26-3-P

APPROX WEIGHT: 78.10 lbs.
DOES NOT INCLUDE WEIGHT OF POWER OR PACKAGING!!!

*** ANY ADDITIONS, DELETIONS, OR OMISSIONS MUST BE CORRECTED ON THIS DRAWING AS THIS DRAWING WILL BE CONSIDERED ALL INCLUSIVE ***
ALL GRAPHICS PROVIDED ARE FOR REFERENCE ONLY. IF CERTAIN DIMENSIONS ARE CRITICAL PLEASE VERIFY THOSE DIMENSIONS WITH YOUR SALESPERSON

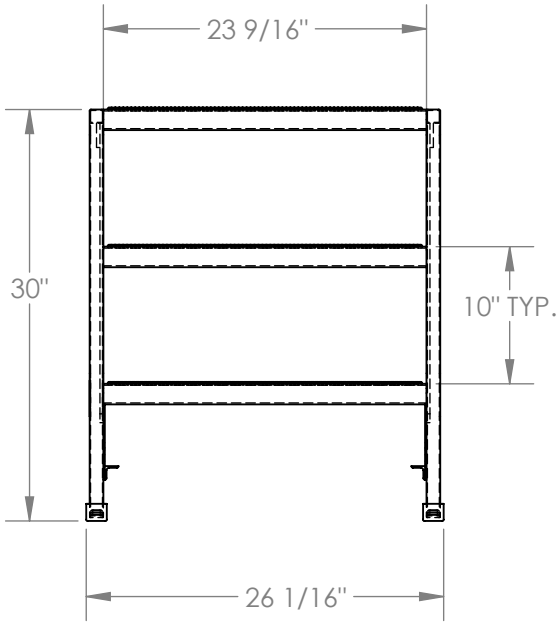

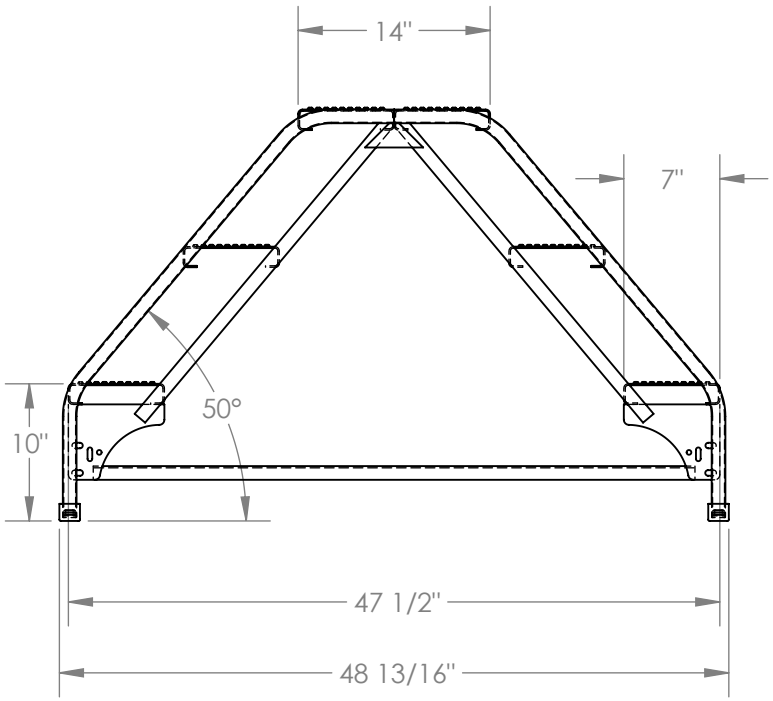

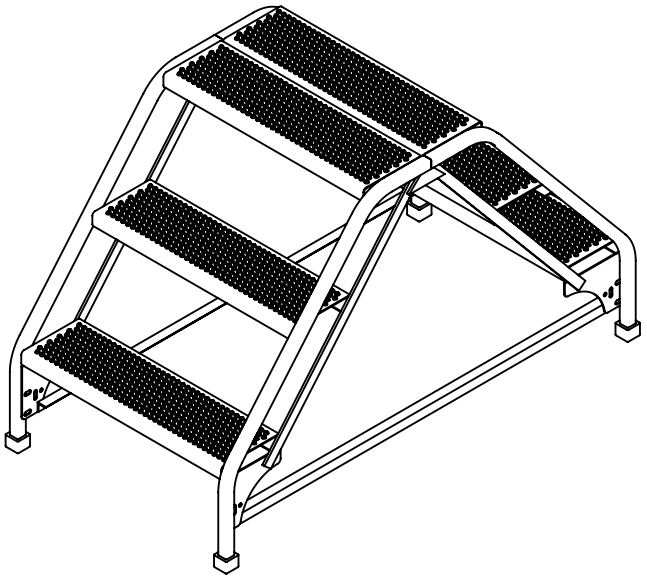

STANDARD FEATURES

MODEL NUMBER IS LAD-DD-26-3-P
OVERALL WIDTH IS 26 1/16"
USABLE WIDTH IS 23 9/16"
OVERALL LENGTH IS 48 13/16"
USABLE LENGTH IS 47 1/2"
OVERALL HEIGHT IS 30"
STEP DEPTH IS 7"
TOP PLATFORM DEPTH IS 14"
ANGLE OF INCLINE IS 50°
STEP STYLE IS PERFORATED
COLOR IS VESTIL BLUE
MAX CAPACITY IS 350 LBS

NOTE

NONE

SPECIAL FEATURES

NONE

DIMENSION TOLERANCE ± 1/4"

APPROVAL

I, THE UNDERSIGNED, AGREE THAT THE PRODUCT AS REPRESENTED SATISFIES DESIGN AND DIMENSION REQUIREMENTS. I ALSO ACKNOWLEDGE MY DUTY TO CONFIRM PRODUCT AND INSTALLATION COMPLIANCE WITH ALL APPLICABLE FEDERAL, STATE AND LOCAL REGULATIONS AND STANDARDS.

ALL SPECIAL UNITS ARE NON-RETURNABLE

[ ] As drawn [ ] As marked

Signed:_____Date:_____

LEAD TIME WILL START UPON RECEIPT OF SIGNED APPROVAL DRAWING

FOR INTERNAL USE ONLY PROJECT SIGN OFF	
SALES	
ENG.	
FAB.	
POWER	

DISTRIBUTOR'S NAME: HOF EQUIPMENT COMPANY PH: 888-990-1150			P.O.# X
			W.O.# X
DRAWN BY: B.NOTHNAGEL	DATE: 06/09/2014		SALES: X
REFERENCE: X		SCALE: 1:14	FILE NAME: 44-007-520
QUOTED LEAD TIME: X		QUOTE # X	

DOUBLE SIDED STEP LADDER, 3-STEP, GRIP STRUT - LAD-DD-26-3-G

APPROX WEIGHT: 79.56 lbs.
DOES NOT INCLUDE WEIGHT OF POWER OR PACKAGING!!!

*** ANY ADDITIONS, DELETIONS, OR OMISSIONS MUST BE CORRECTED ON THIS DRAWING AS THIS DRAWING WILL BE CONSIDERED ALL INCLUSIVE ***
ALL GRAPHICS PROVIDED ARE FOR REFERENCE ONLY. IF CERTAIN DIMENSIONS ARE CRITICAL PLEASE VERIFY THOSE DIMENSIONS WITH YOUR SALESPERSON

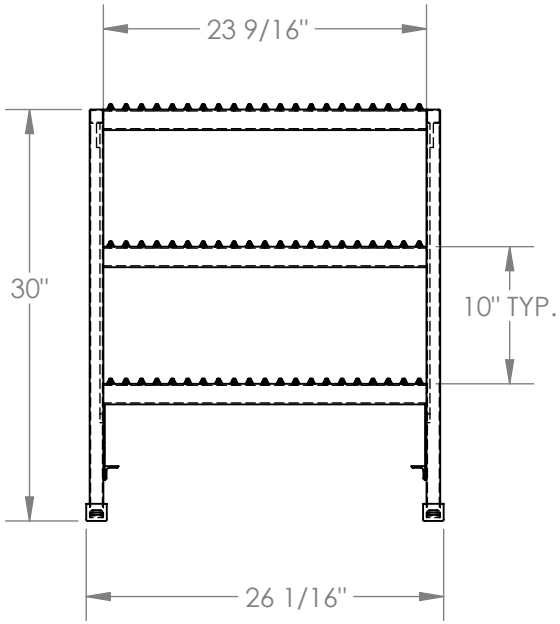

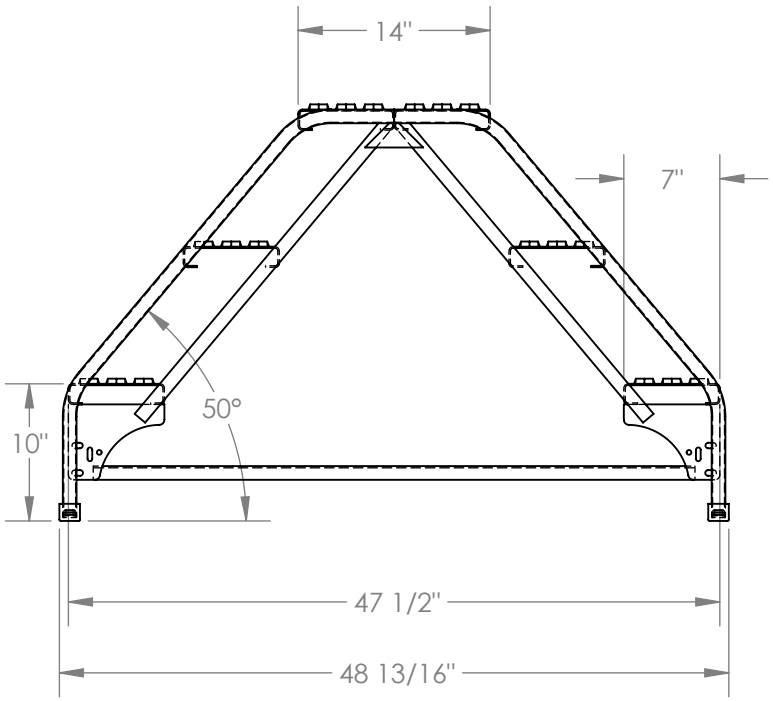

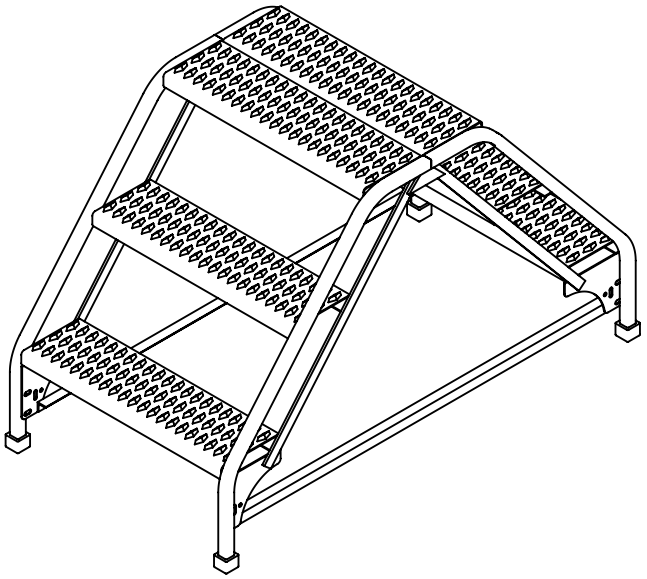

STANDARD FEATURES

MODEL NUMBER IS LAD-DD-26-3-G
OVERALL WIDTH IS 26 1/16"
USABLE WIDTH IS 23 9/16"
OVERALL LENGTH IS 48 13/16"
USABLE LENGTH IS 47 1/2"
OVERALL HEIGHT IS 30"
STEP DEPTH IS 7"
TOP PLATFORM DEPTH IS 14"
ANGLE OF INCLINE IS 50°
STEP STYLE IS GRIP STRUT
COLOR IS VESTIL BLUE
MAX CAPACITY IS 350 LBS

NOTE

NONE

SPECIAL FEATURES

NONE

DIMENSION TOLERANCE ± 1/4"

APPROVAL

I, THE UNDERSIGNED, AGREE THAT THE PRODUCT AS REPRESENTED SATISFIES DESIGN AND DIMENSION REQUIREMENTS. I ALSO ACKNOWLEDGE MY DUTY TO CONFIRM PRODUCT AND INSTALLATION COMPLIANCE WITH ALL APPLICABLE FEDERAL, STATE AND LOCAL REGULATIONS AND STANDARDS.

ALL SPECIAL UNITS ARE NON-RETURNABLE

[ ] As drawn [ ] As marked

Signed:_____Date:_____

LEAD TIME WILL START UPON RECEIPT OF SIGNED APPROVAL DRAWING

FOR INTERNAL USE ONLY PROJECT SIGN OFF	
SALES	
ENG.	
FAB.	
POWER	

DISTRIBUTOR'S NAME: HOF EQUIPMENT COMPANY PH: 888-990-1150			P.O.# X
			W.O.# X
DRAWN BY: B.NOTHNAGEL	DATE: 06/09/2014		SALES: X
REFERENCE: X		SCALE: 1:14	FILE NAME: 44-007-511
QUOTED LEAD TIME: X		QUOTE # X	

DOUBLE SIDED STEP LADDER, 3-STEP, PERFORATED - LAD-DD-32-3-P

APPROX WEIGHT: 92.32 lbs.
DOES NOT INCLUDE WEIGHT OF POWER OR PACKAGING!!!

*** ANY ADDITIONS, DELETIONS, OR OMISSIONS MUST BE CORRECTED ON THIS DRAWING AS THIS DRAWING WILL BE CONSIDERED ALL INCLUSIVE ***
ALL GRAPHICS PROVIDED ARE FOR REFERENCE ONLY. IF CERTAIN DIMENSIONS ARE CRITICAL PLEASE VERIFY THOSE DIMENSIONS WITH YOUR SALESPERSON

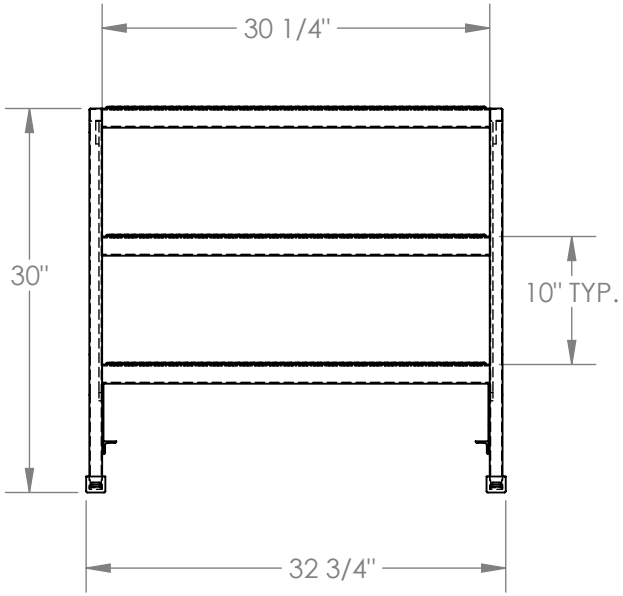

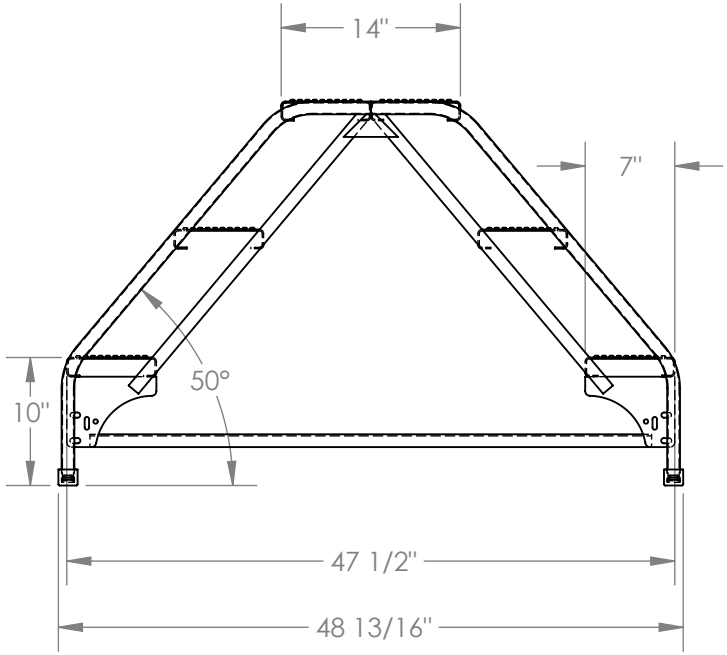

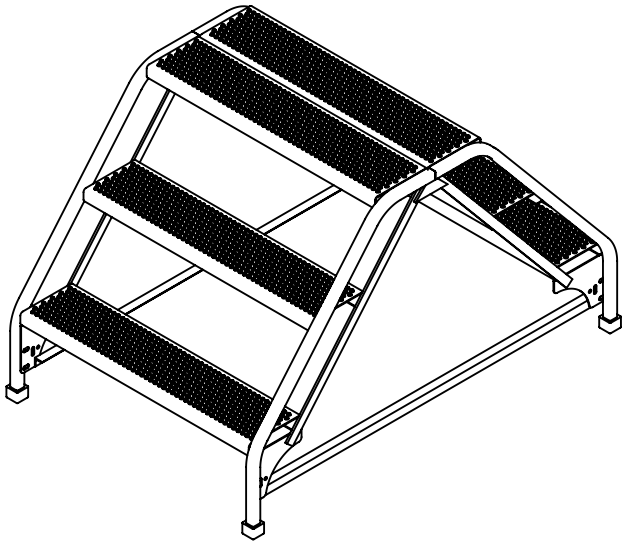

STANDARD FEATURES

MODEL NUMBER IS LAD-DD-32-3-P
OVERALL WIDTH IS 32 3/4"
USABLE WIDTH IS 30 1/4"
OVERALL LENGTH IS 48 13/16"
USABLE LENGTH IS 47 1/2"
OVERALL HEIGHT IS 30"
STEP DEPTH IS 7"
TOP PLATFORM DEPTH IS 14"
ANGLE OF INCLINE IS 50°
STEP STYLE IS PERFORATED
COLOR IS VESTIL BLUE
MAX CAPACITY IS 350 LBS

NOTE

NONE

SPECIAL FEATURES

NONE

DIMENSION TOLERANCE ± 1/4"

APPROVAL

I, THE UNDERSIGNED, AGREE THAT THE PRODUCT AS REPRESENTED SATISFIES DESIGN AND DIMENSION REQUIREMENTS. I ALSO ACKNOWLEDGE MY DUTY TO CONFIRM PRODUCT AND INSTALLATION COMPLIANCE WITH ALL APPLICABLE FEDERAL, STATE AND LOCAL REGULATIONS AND STANDARDS.

ALL SPECIAL UNITS ARE NON-RETURNABLE

[ ] As drawn [ ] As marked

Signed:_____Date:_____

LEAD TIME WILL START UPON RECEIPT OF SIGNED APPROVAL DRAWING

FOR INTERNAL USE ONLY PROJECT SIGN OFF	
SALES	
ENG.	
FAB.	
POWER	

DISTRIBUTOR'S NAME: HOF EQUIPMENT COMPANY PH: 888-990-1150			P.O.# X
			W.O.# X
DRAWN BY: B.NOTHNAGEL	DATE: 06/09/2014		SALES: X
REFERENCE: X		SCALE: 1:15	FILE NAME: 44-007-523
QUOTED LEAD TIME: X	QUOTE # X		

DOUBLE SIDED STEP LADDER, 3-STEP, GRIP STRUT - LAD-DD-32-3-G

APPROX WEIGHT: 94.12 lbs.
DOES NOT INCLUDE WEIGHT OF POWER OR PACKAGING!!!

*** ANY ADDITIONS, DELETIONS, OR OMISSIONS MUST BE CORRECTED ON THIS DRAWING AS THIS DRAWING WILL BE CONSIDERED ALL INCLUSIVE ***
ALL GRAPHICS PROVIDED ARE FOR REFERENCE ONLY. IF CERTAIN DIMENSIONS ARE CRITICAL PLEASE VERIFY THOSE DIMENSIONS WITH YOUR SALESPERSON

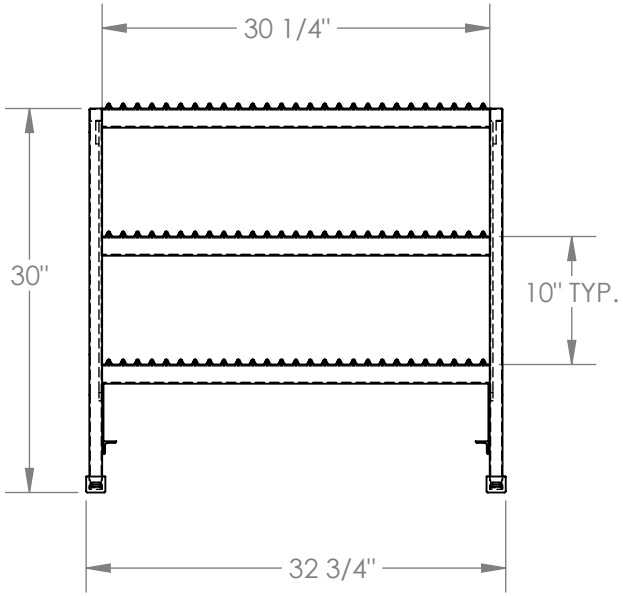

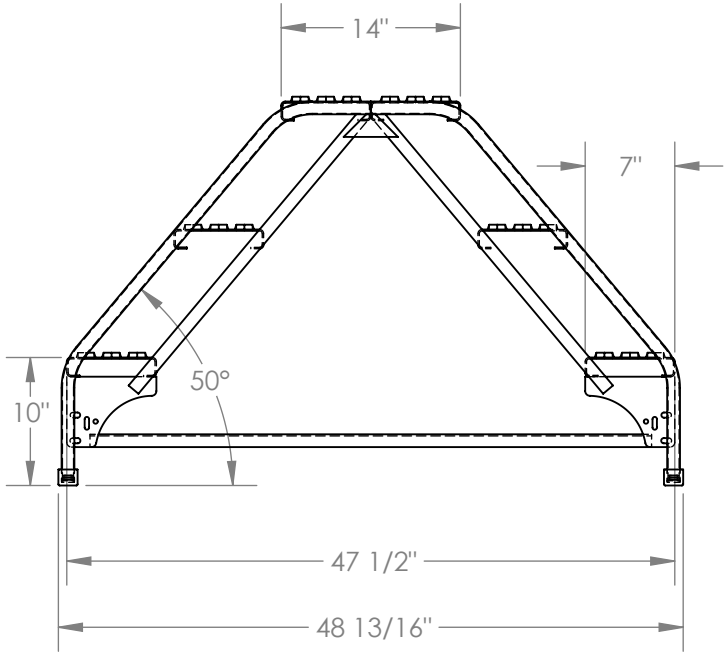

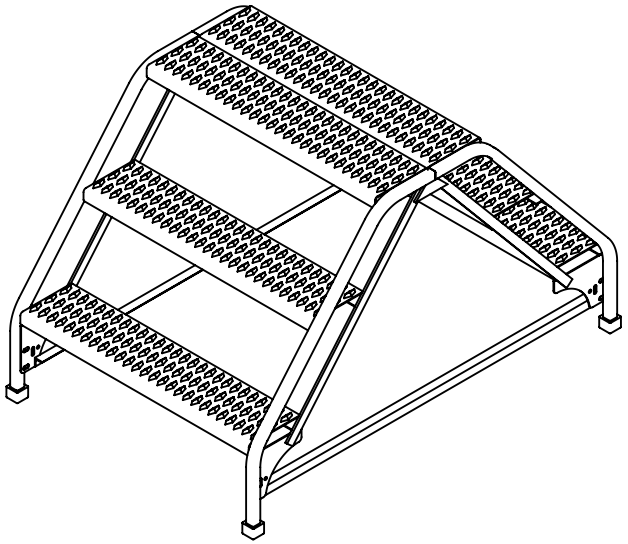

STANDARD FEATURES

MODEL NUMBER IS LAD-DD-32-3-G
OVERALL WIDTH IS 32 3/4"
USABLE WIDTH IS 30 1/4"
OVERALL LENGTH IS 48 13/16"
USABLE LENGTH IS 47 1/2"
OVERALL HEIGHT IS 30"
STEP DEPTH IS 7"
TOP PLATFORM DEPTH IS 14"
ANGLE OF INCLINE IS 50°
STEP STYLE IS GRIP STRUT
COLOR IS VESTIL BLUE
MAX CAPACITY IS 350 LBS

NOTE

NONE

SPECIAL FEATURES

NONE

DIMENSION TOLERANCE ± 1/4"

APPROVAL

I, THE UNDERSIGNED, AGREE THAT THE PRODUCT AS REPRESENTED SATISFIES DESIGN AND DIMENSION REQUIREMENTS. I ALSO ACKNOWLEDGE MY DUTY TO CONFIRM PRODUCT AND INSTALLATION COMPLIANCE WITH ALL APPLICABLE FEDERAL, STATE AND LOCAL REGULATIONS AND STANDARDS.

ALL SPECIAL UNITS ARE NON-RETURNABLE

[ ] As drawn [ ] As marked

Signed:_____Date:_____

LEAD TIME WILL START UPON RECEIPT OF SIGNED APPROVAL DRAWING

FOR INTERNAL USE ONLY PROJECT SIGN OFF	
SALES	
ENG.	
FAB.	
POWER	

DISTRIBUTOR'S NAME: HOF EQUIPMENT COMPANY PH: 888-990-1150			P.O.# X
			W.O.# X
DRAWN BY: B.NOTHNAGEL	DATE: 06/09/2014		SALES: X
REFERENCE: X		SCALE: 1:15	FILE NAME: 44-007-514
QUOTED LEAD TIME: X	QUOTE # X		